Update on NASA White Books for High Data Throughput Optical Signaling

11 November 2015

Status Update

- White Books for NASA proposal for High Data Throughput Optical Signaling presented at CCSDS Spring 2015 Meeting as recommendations for Blue Books
- NASA's current plan is to produce Orange Book for High Data Throughput Optical Signaling
- New White Books submitted to working group at CCSDS Fall 2015 meeting
  - Updates terminology (bit, etc.) to be consistent with consensus from 5/15 working group telecon
  - Defines details of physical frame header
  - Addresses comments received on previous draft

High Data Throughput Signaling Overview

(February 2015)

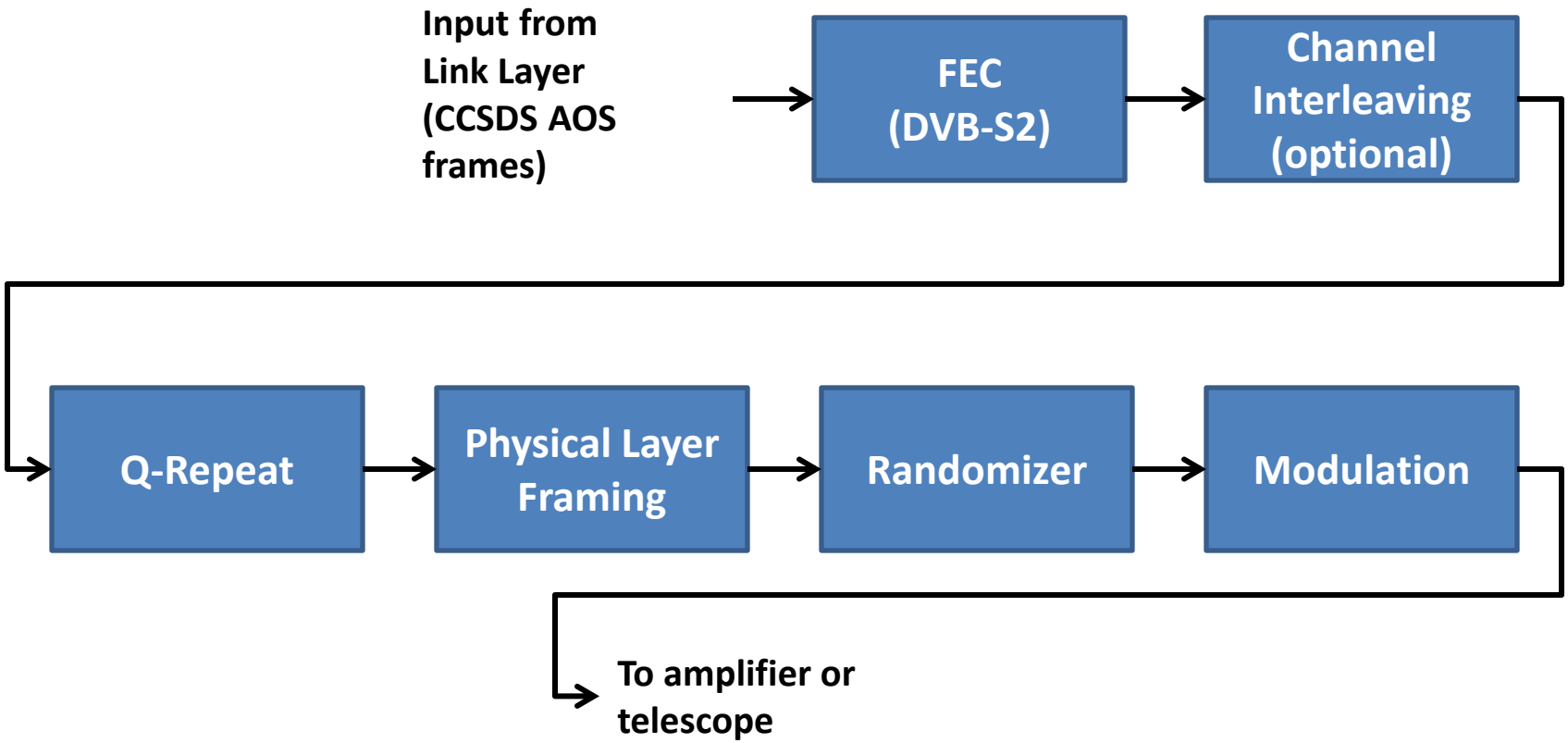

Data Link Interface

- AOS Space Data Link frames delivered to input to Coding and Sync layer
- AOS frames are 16104 bits
- Two frames concatenated to produce 32208-bit input block to encoder
- No additional sync markers added to delineate AOS frames

Forward Error Correction

- Links utilize DVB-S2 code
  - BCH outer code + LDPC inner code
  - Note: modulation and framing portions of DVB-S2 are not used
- Any DVB-S2 code rate may be used with coordination between user and ground relay
- Rationale:
  - Industry standard, based on ETSI EN 302 307
  - Excellent power efficiency
  - Variable code rate supports varying link conditions
  - Fixed output block size simplifies high rate switching, multiplexing at relay node

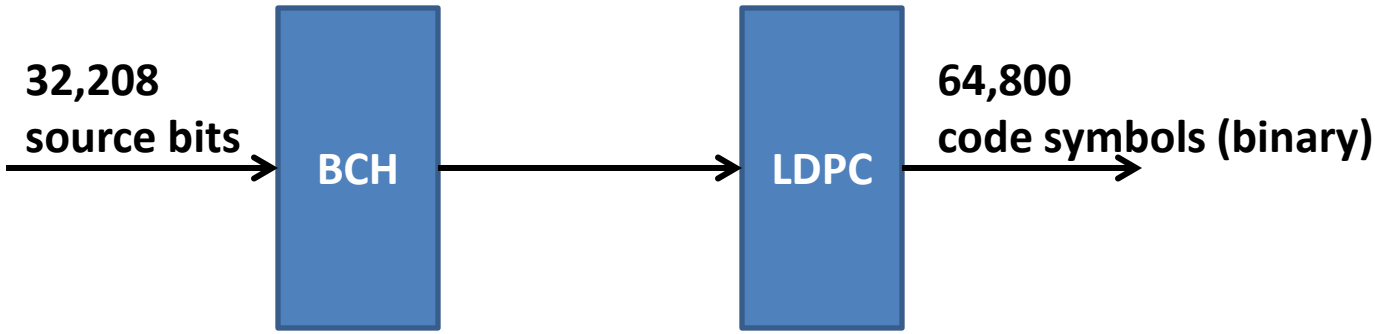

(Example: rate ½ DVB-S2 FEC)

Channel Interleaving

- Channel interleaver is used for all links going through the Earth atmosphere
- Convolutional bit interleaver with data-rate dependent parameters
- Rationale:
  - Mitigates effects of atmospheric fading cannel
  - Convolultional interleaver requires ½ memory of equivalent performance block interleaver

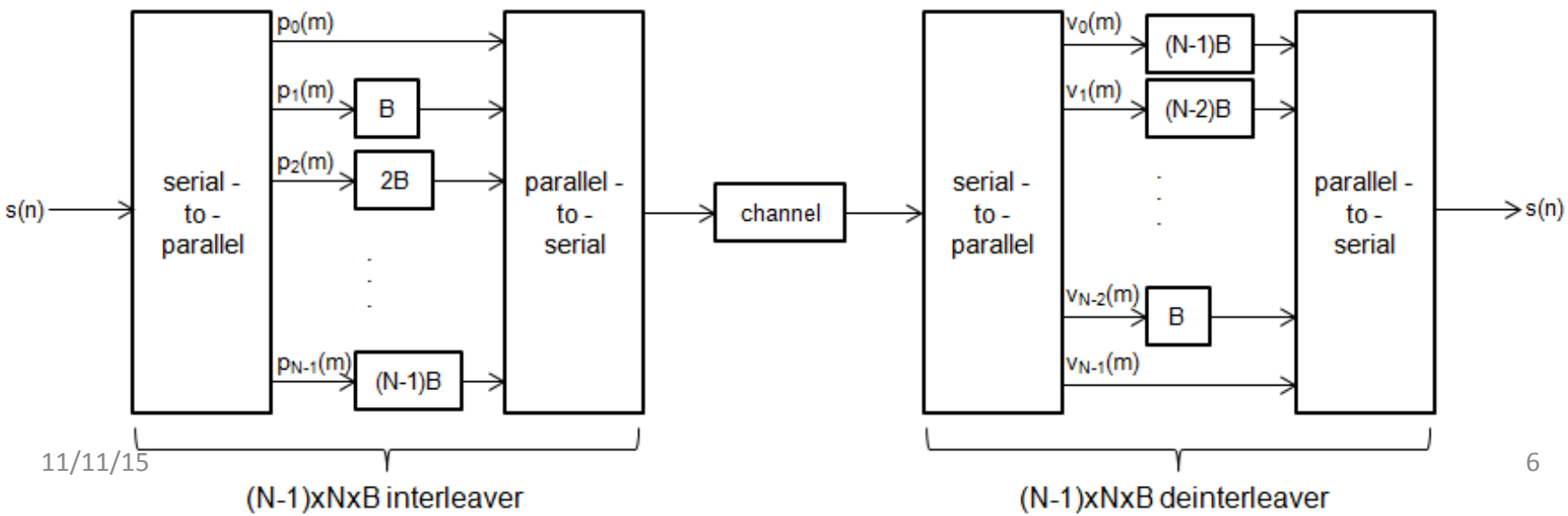

Q-Repeat

- For lower data rate modes (<51 Mbps), individual (interleaved) codewords are repeated Q times during transmission
- Rationale:
  - Enables low data rate links
  - Limits dead time from burst-mode DPSK

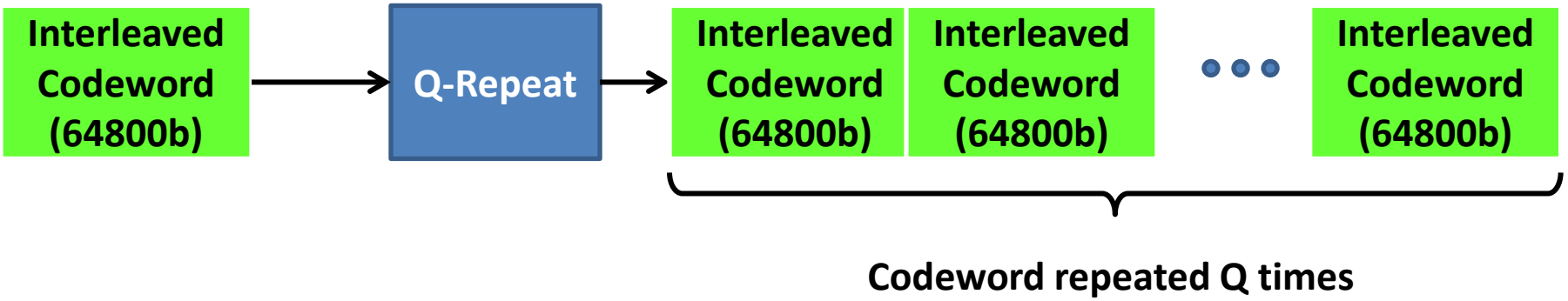

Physical Layer Framing

- 1024-bit header is appended to each (interleaved) codeword at physical layer
  - Unique word for synchronization, content specification, channel state monitoring
  - Control Data used for channel state information, frame sequence counters, physical layer control
- Header contents are encoded separately from payload data with a code that may be processed at space relay
- Rationale:
  - Enables physical layer synchronization
  - Enables multiplexing and switching at physical layer in relay nodes

Unique Word

- Unique Word consists of
  - 96-bit fixed sequence– 0xEBE2 587B 22EE 5319 A15A A382
  - 288-bit sequence that identifies a specific data stream on the link
- Rationale
  - Fixed sequence can be used for frame alignment
  - Unique word allows identification of data flows at relay segment
  - Channel state may be monitored using unique word

Control Data Field

- Control Data Field contains
  - 128-bit Channel State Information
  - 384-bit Frame Sequence Number
  - 128-bit Physical Layer Control

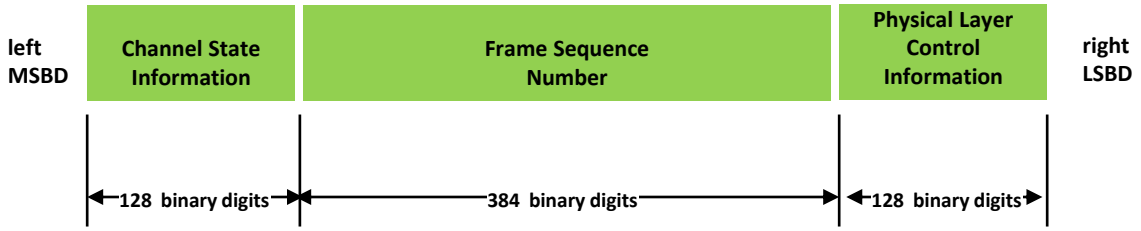

Channel State Information

- At relay segment, incoming unique words are correlated against expected unique words to measure channel state
- Channel state information is 8-bit representation of correlation with two most likely unique words
- Channel state information is encoded with BCH (127,8) code and padded with 0 bit to produce 128-bit field
- Rationale
  - Channel state information added at relay segment to improves decoding performance at end point

Sub-Field	Res	Channel State parity bits			Max Correlation Channel State Value				2nd Max Correlation Channel State Value			
BCH Order	N/A	d_{118}	…	d_0	m_7	m_6	m_5	m_4	$\mathbf{m_3}$	m_2	m_1	m_0
Bit	0	1	…	119	120	121	122	123	124	125	126	127
	MSBD											LSBD

Frame Sequence Number

- 22-bit Frame Sequence Number (FSN) associated with each stream is transmitted on each link
- FSN is encoded with BCH (127,22) code and padded with 0 bit and repeated 3X produce 384-bit field
- Rationale
  - Frame sequence number allows for resynchronization of channel interleaver after loss of data at receiver

Sub-Field	Res	FSN parity bits			FSN			Res	FSN parity bits			FSN			Res	FSN parity bits			FSN		
BCH Order	N/A	d_{104}	…	d_0	m_{21}	…	m_0	N/A	d_{104}	…	d_0	m_{21}	…	m_0	N/A	d_{104}	…	d_0	m_{21}	…	m_0
Bit	0	1	…	105	106	…	127	128	129	…	233	234	…	255	256	257	---	361	362	…	383
	MSBD																	LSBD			

Physical Layer Control Field

- Provides reliable, low-data-rate, bi-directional link between two optical terminals
- Can be used for closed-loop point-ahead correction (defined in White Book) or other physical layer functions
- Each physical-layer control field contains a 22-bit message, encoded with BCH(127,22) code

Sub-Field	Res	Physical Layer Control parity binary digits			Physical Layer Control Information		
BCH Order	N/A	d_{104}	…	d_0	m_{21}	…	m_0
Binary digits	0	1	…	105	106	…	127
	MSBD						LSBD

Randomizer

- Based on LFSR, $1 + x + x^3 + x^{12} + x^{16}$, initialized to 0xFFFF at beginning of frame
- Unique word portion of frame is not randomized
- Rationale:
  - Reduces likelihood of long runs of 1's or 0's in transmitted sequence

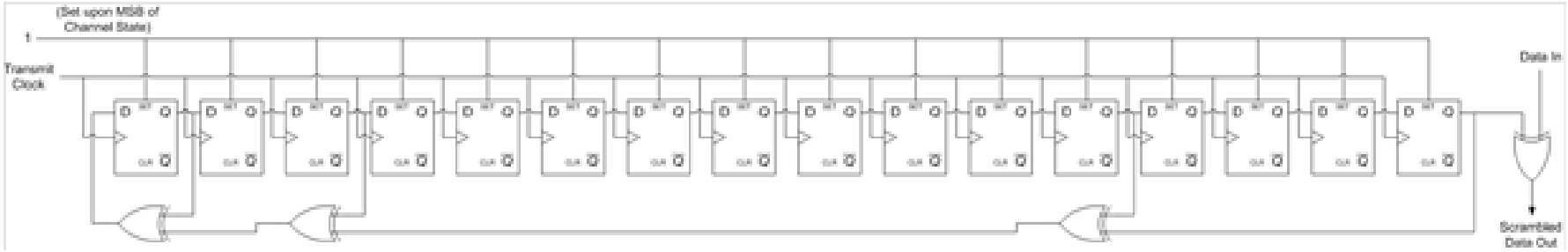

Modulation

- Differential phase shift keying at slot rate of 2.88 GHz (TBR)
- Data transmitted in bursts of 176 symbols. Deadtime between bursts varied to change data rate
- Rationale:
  - DPSK provides good power efficiency with low-complexity incoherent receiver
  - Burst mode is compatible with average-power limited transmitters
  - Enables low-complexity multi-rate transceivers

Wavelength

- Separate transmit, receive, acquisition wavelengths
- Selected from ITU-T G.694.1, v.2.0 (2012-02-13)
  - 100-Ghz spacing, fixed grid
  - Optical C-band (1530-1565 nm)
- A/B terminal specification determines transmit and receive wavelengths in system architecture
- Rationale:
  - Allows leveraging of current and future telecom industry technology developments
  - Large potential vendor base
  - Enables eventual data throughput scaling using industry-standard wavelength division multiplexing

Pending Updates

- Current White Books are organized according to agreed-upon outline for Blue Books
  - Orange Book will be reorganized for clarity of description of this particular signal
  - Coding and Sync and Physical Layer books will be combined into one Orange Book for additional clarity

- Numerous TBXs remain in text. These were included for discussion within the working group.
  - Orange book will remove TBXs

CNES Comments on NASA White Books

- Recommend 100-GHz channel spacing in C and L bands (addressed)
- Recommend incorporating discussion of Wavelength Division Multiplexing in standard (addressed, generally)
- Recommend including additional clock rates to support higher data rate modes (pending)
  - Propose 5760 MHz, 11520 MHz, 23040 MHz
  - Desire for OTU-compatible source rates

Path Forward

- Collect and respond to feedback from CCSDS Optical Communications Working Group
  - Received comments from CNES at Spring Working Group Meeting
- Release Orange Book based on NASA recommendation for High Data Throughput Signaling

Optical Relay Architecture

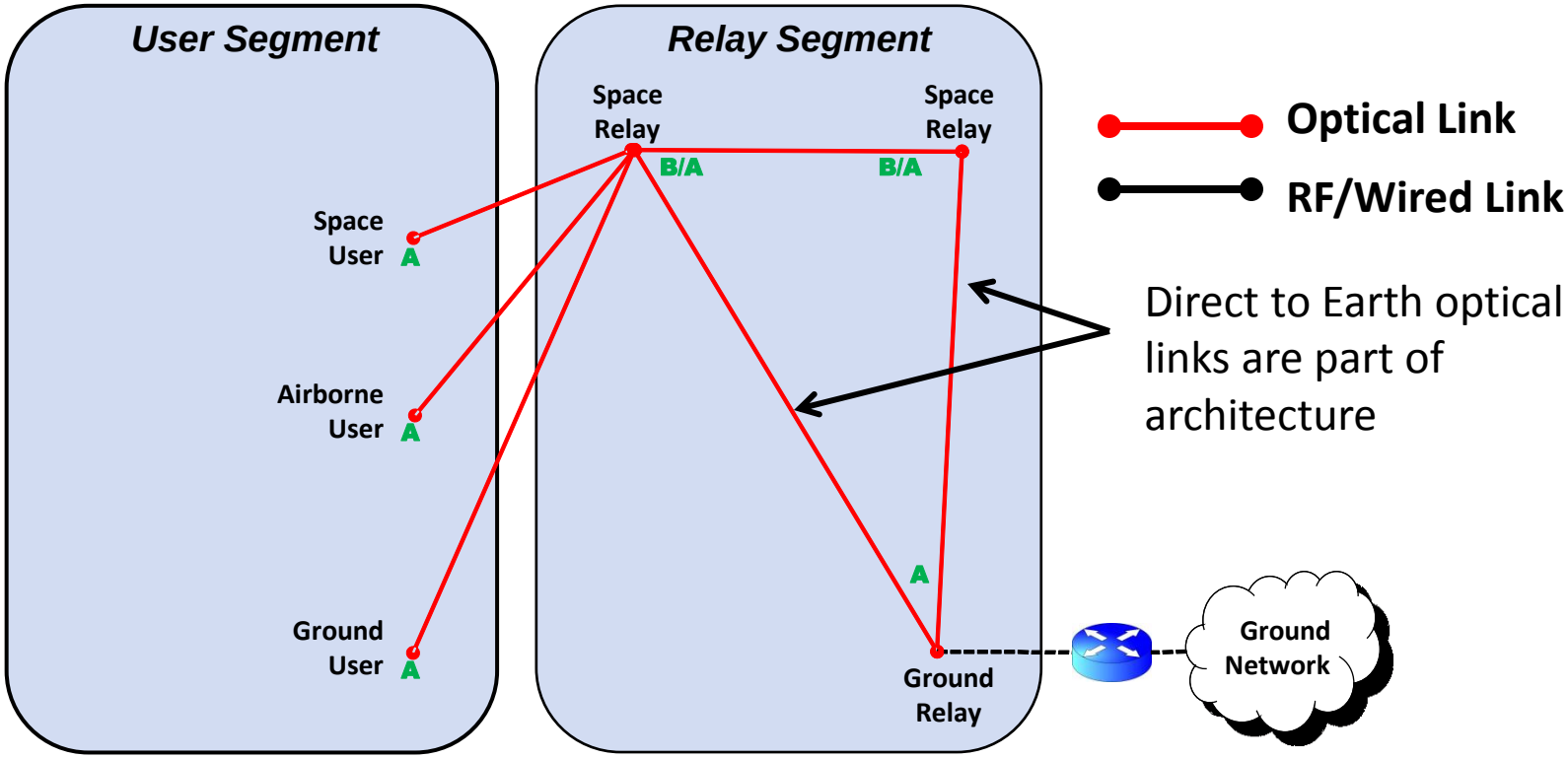

Primary near term interest is in relay architecture for conveying data from user to terrestrial ground network

Relay Link Example

(February 2015)

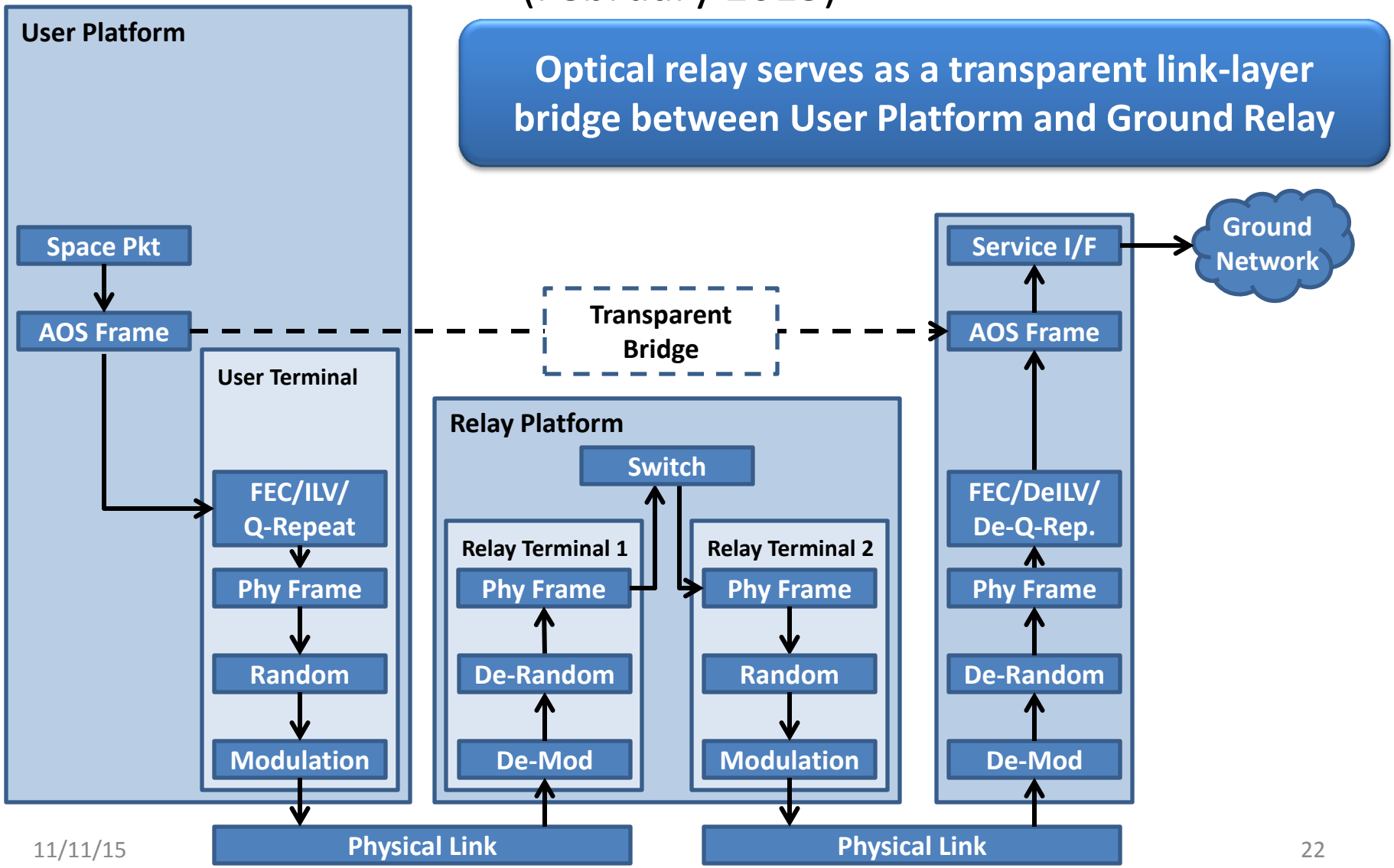

Modulation

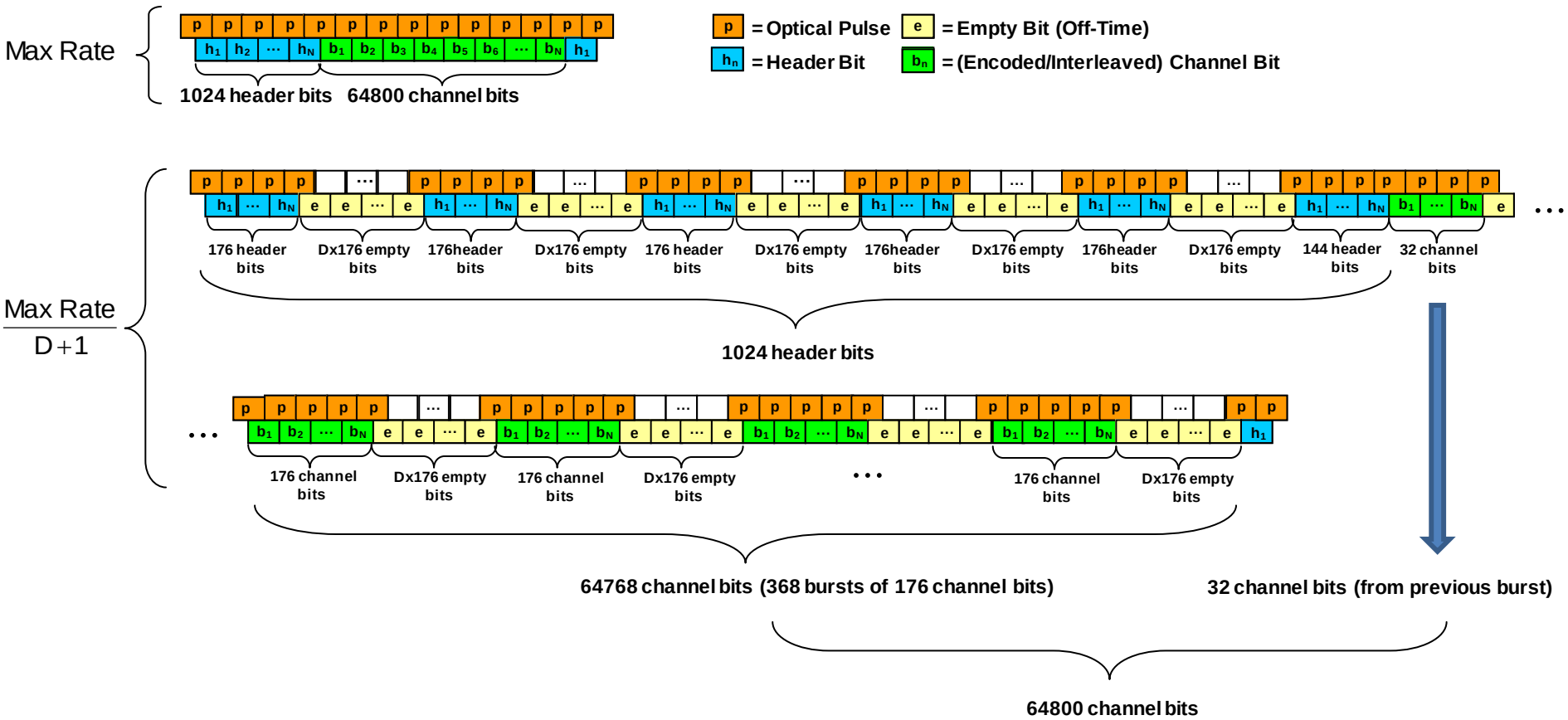
Max Rate
1024 header bits
64800 channel bits
p = Optical Pulse
e = Empty Bit (Off-Time)
hn = Header Bit
bn = (Encoded/Interleaved) Channel Bit
Max Rate / D+1
176 header bits
Dx176 empty bits
176header bits
144 header bits
32 channel bits
1024 header bits
176 channel bits
64768 channel bits (368 bursts of 176 channel bits)
32 channel bits (from previous burst)
64800 channel bits

Example Data Rate Modes

(Rate ½ Code)

Mode Name	User Data Rate (Mbps)	Q Repetition	Interleaver N	Interleaver B (bits)
U-1244	1244 (Max)	1	162	96,000
U-622	622 (Max/2)	1	162	48,000
U-311	311 (Max/4)	1	162	24,000
U-155	155.5 (Max/8)	1	162	11,200
U-51.8	51.8 (Max/24)	1	162	4,000
U-16	16	2	162	1216
U-8	8	4	162	608
U-4	4	8	162	288
U-2	2	16	162	128

Notes:

- User data rates up to 2.24 Gbps are supported with no changes to space relay using high rate DVB-S2 codes
- Single-channel rates >10 Gbps are possible with available electronics and optical components
- Rates beyond 10 Gbps are possible using WDM approaches